赤

AKAI

LCD COLOR TV-SET

Model:
LTA-26N573HCA

SERVICE MANUAL

www.akai.ru

LTA-26N573HCA PICTURE BOM

PART NO	Descriptions	USAGE	UNIT	PHOTO	
	cabinet AS OF	1	PCS		
	PANEL	**1**	PCS		
	AC POWER CABLE	1	PCS		
2--1	**MIAN BOARD AND KEY BOARD CONNECTING CABLE(B077)**	1	PCS	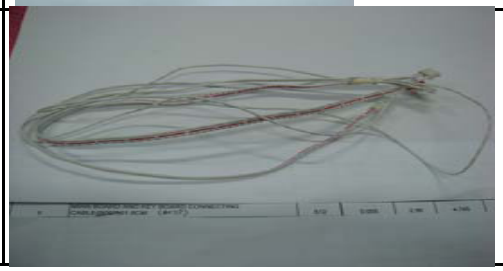	

2--2	**POWER SUPPLY AND PANEL CONNECTING CABLE(0025)**	1	PCS			
2--3	**PANEL CABLE**	1	PCS			
2--4	**POWER SUPPLY AND MAIN BOARD CONNECTING CABLE(0047)**	1	PCS			
2--5	**MAIN BOARD AND REMOTE CONTROL BOARD CONNECTING CABLE (B015)**	1	PCS			
3	**MAILA BOARD**	1	PCS			
5	**TV KEY BRACKET**	1	PCS			

6	**BATTERY**	2	PCS			
7--6	**SCREW B3X10C**	4	PCS	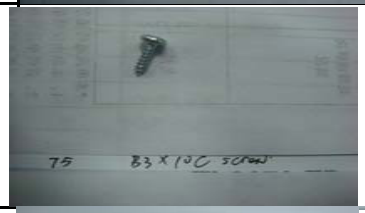		
7--3	**SCREW B4X12F**	12	PCS			
7--4	**SCREW B3X8F**	9	PCS			
7--5	**SCREW M4X8 (2835)**	4	PCS			
7--1	**SCREW MB3X6**	8	PCS			
7--8	**SCREW MB4X12**	2	PCS			

7--2	**SCREW M3X6 (6560)**	3	PCS		
8	**STAND RUBBER FOOT**	0	PCS		
9	**PLASTIC BIGHT**	3	PCS		
10	**NORMAL TAPE**	200MM	PCS		
11	**BLACK ACID TAPE**	300MM	PCS		
12	**ACCESSORY POCKET**	1	PCS		
13	**STAND COVER BOARD**	1	PCS		
14	**BARE TV KEY BOARD**	1	PCS	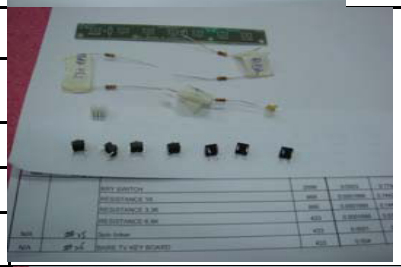	
14--1	**KRY SWITCH**	6	PCS		
14--2	**RESISTANCE 1K**	2	PCS		
14--3	**RESISTANCE 3.3K**	2	PCS		
14--5	**3pin linker**	1	PCS		
15	**BARE REMOTE RECEIVERED BOARD**	1	PCS	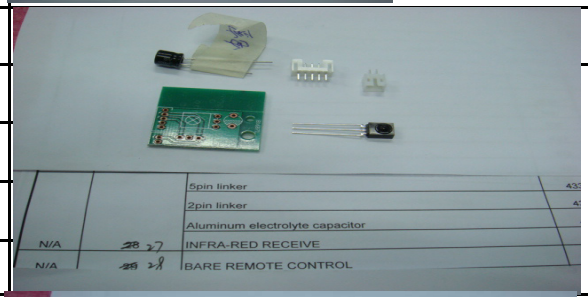	
15--1	**5pin linker**	1	PCS		
15--5	**2pin linker**	1	PCS		
15--4	**Aluminum electrolyte capacitor**	1	PCS		
15--2	**INFRA-RED RECEIVE**	1	PCS		
20	**TV switch BOARD**	1	PCS	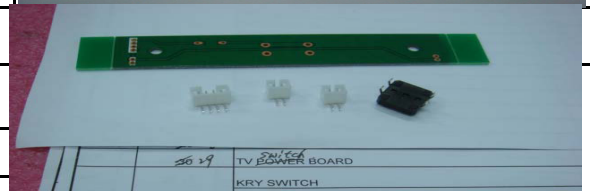	
20--1	**KRY SWITCH**	1	PCS		
20--2	**RESISTANCE 6.8K**	1	PCS		

20--3	**2pin fast linker**	1	PCS	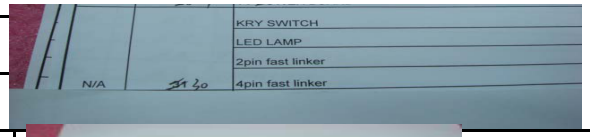	
20--4	**4pin fast linker**	1	PCS		
	REMOTE CONTROL		PCS		
17	**MAIN BOARD**	1	PCS		
18	**POWER BOARD**	1	PCS		
	GIFT BOX	4	PCS		
	CUSION (left and right)	1	PCS		

B.TR901 Trouble Shooting

Europe Multiple HDMI+DVB-T

——Power Supply Trouble

——Function Trouble

——Display Trouble

——Audio Trouble

1. Power Supply Trouble

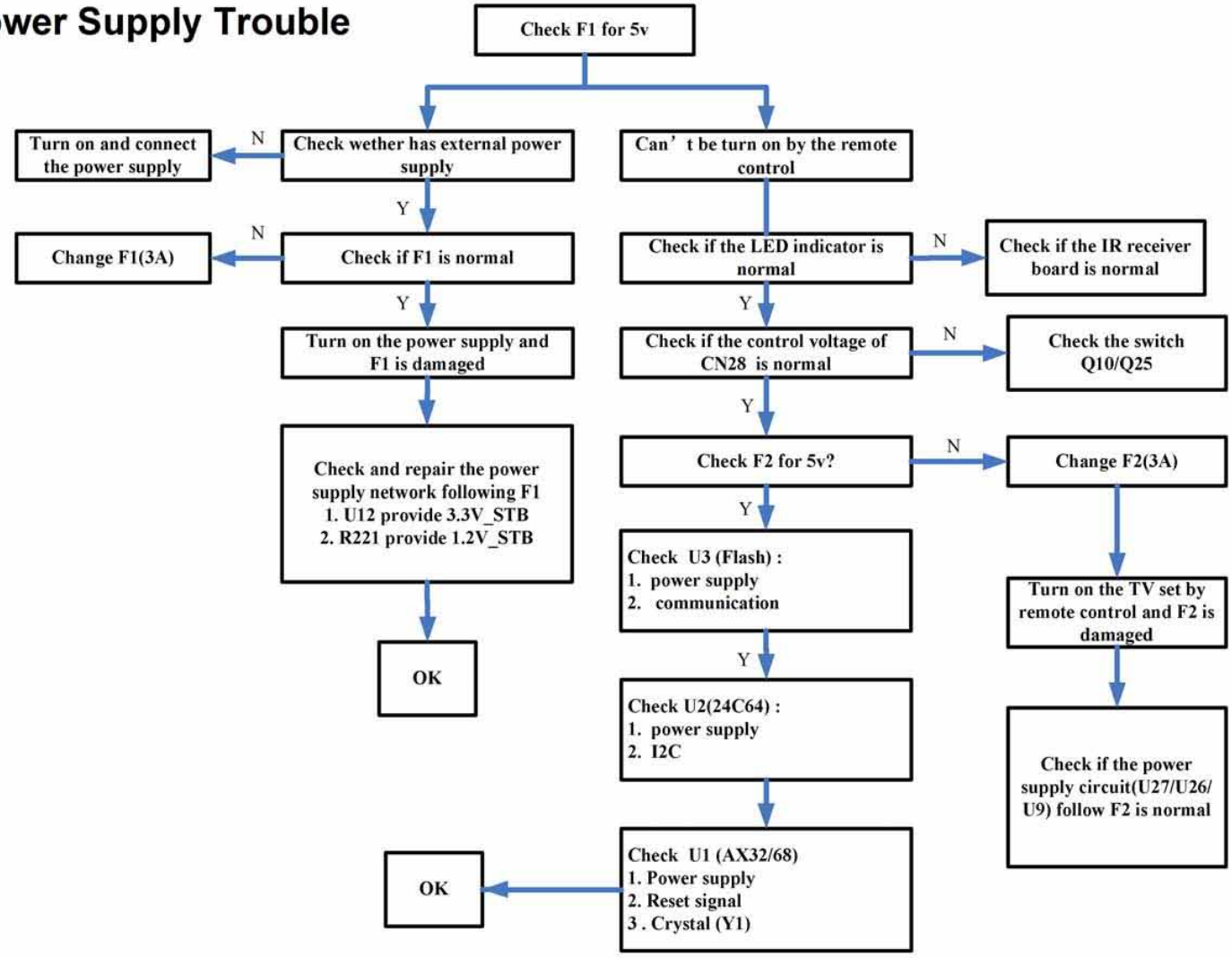

2. Function Trouble

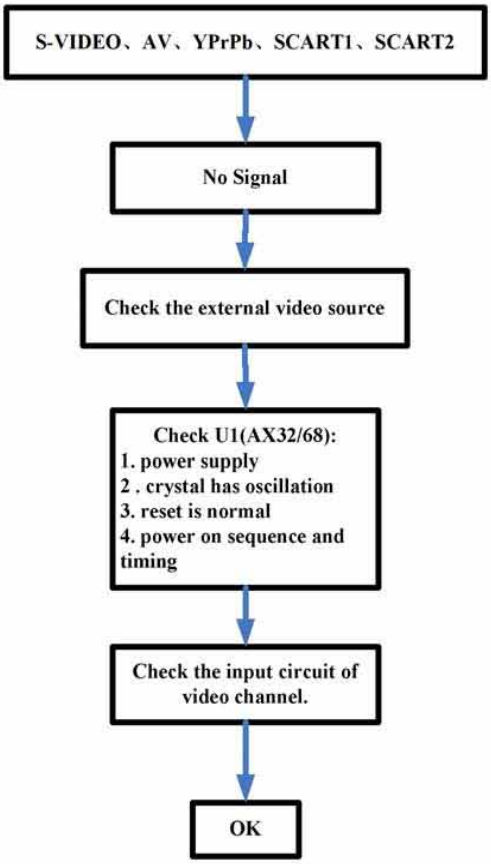

3. Function Trouble (HDMI)

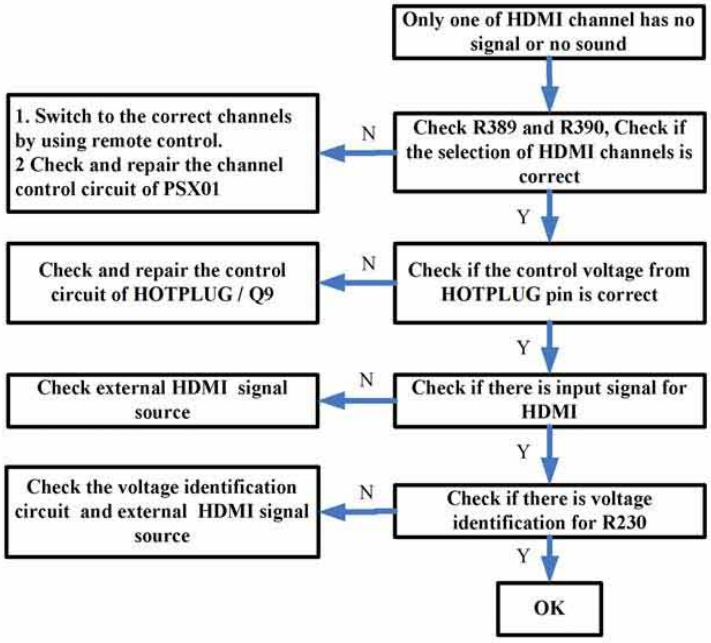

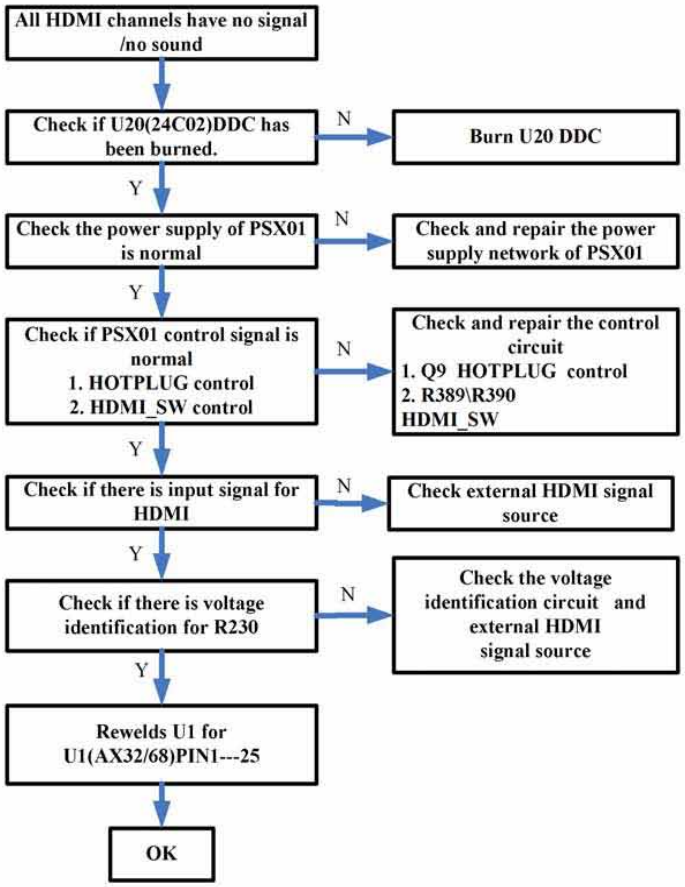

4. Function Trouble (PC)

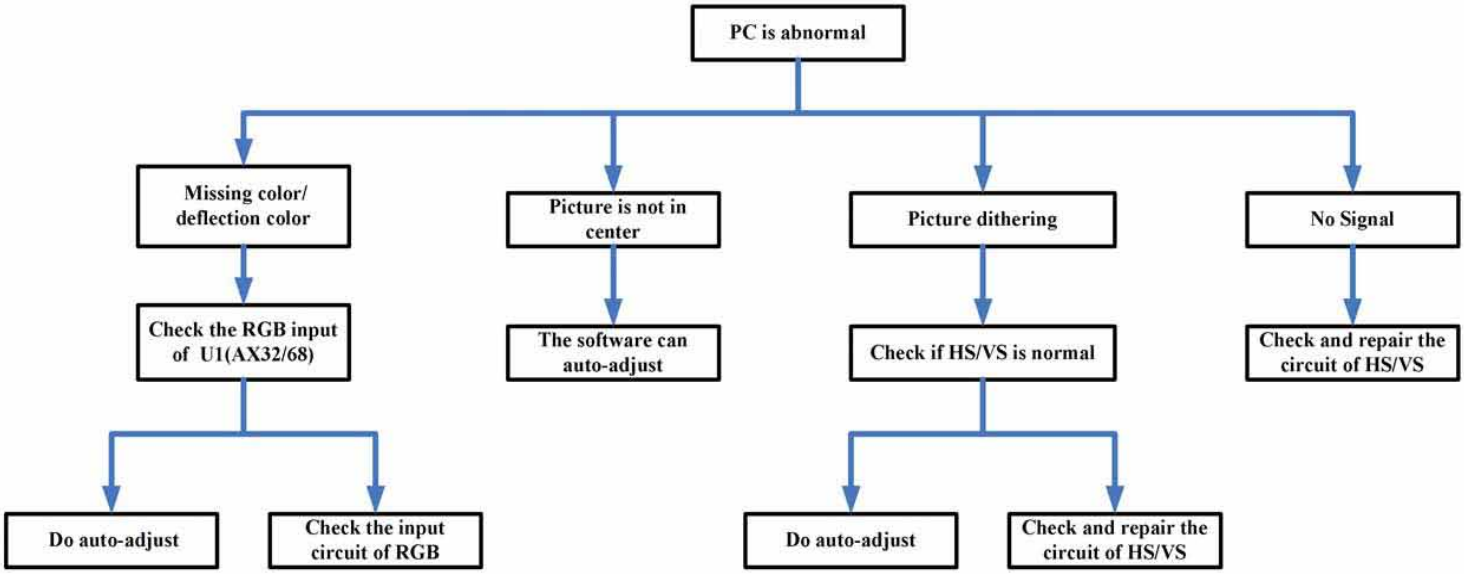

5. Function Trouble (TV)

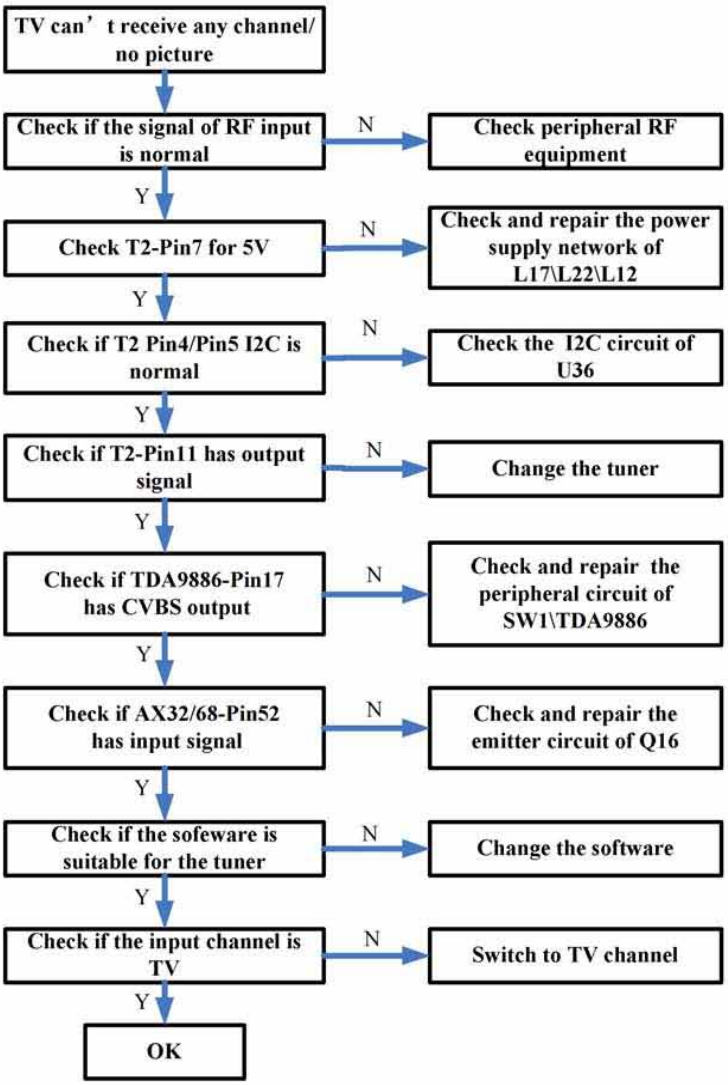

6. Display Trouble

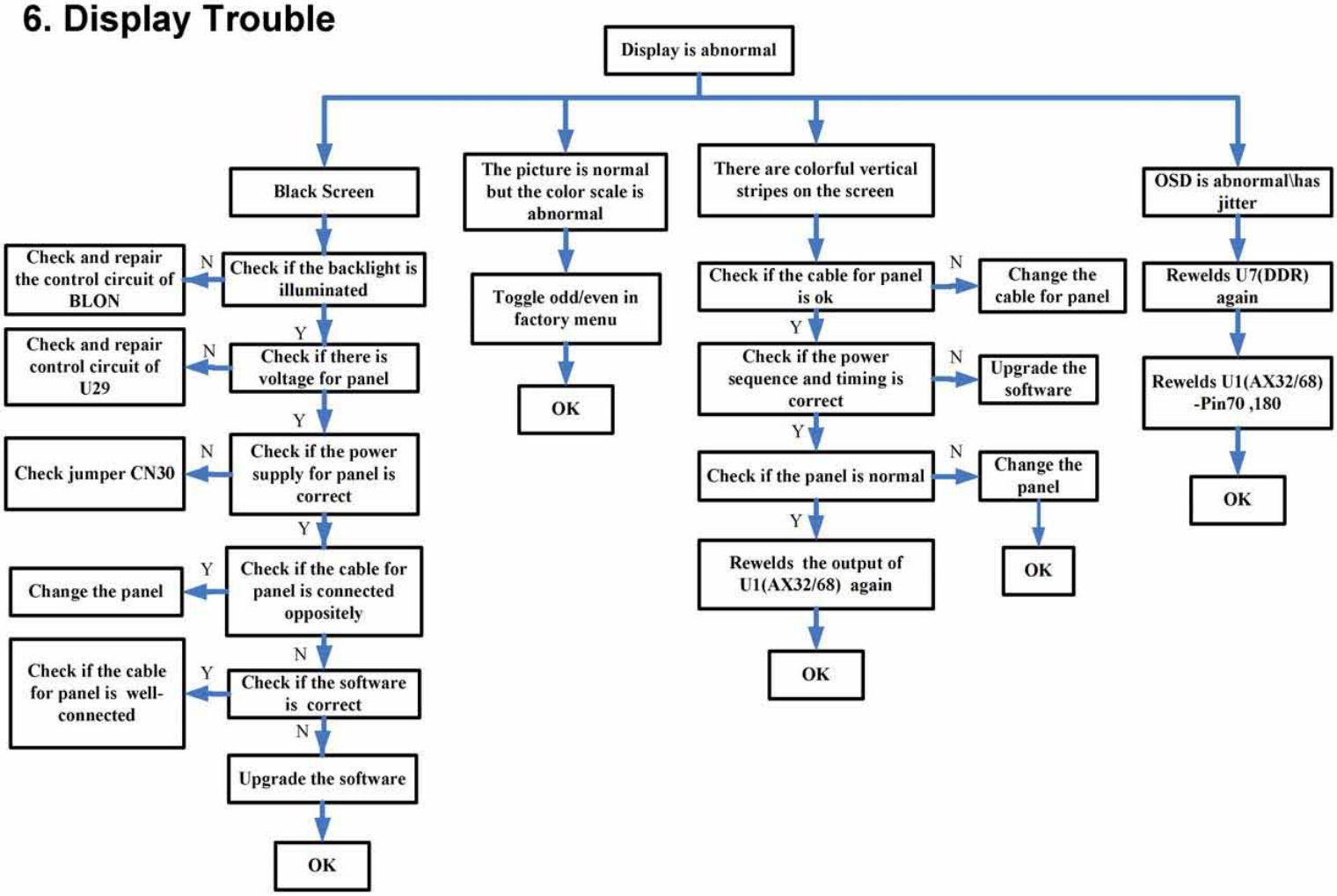

7. Audio Trouble

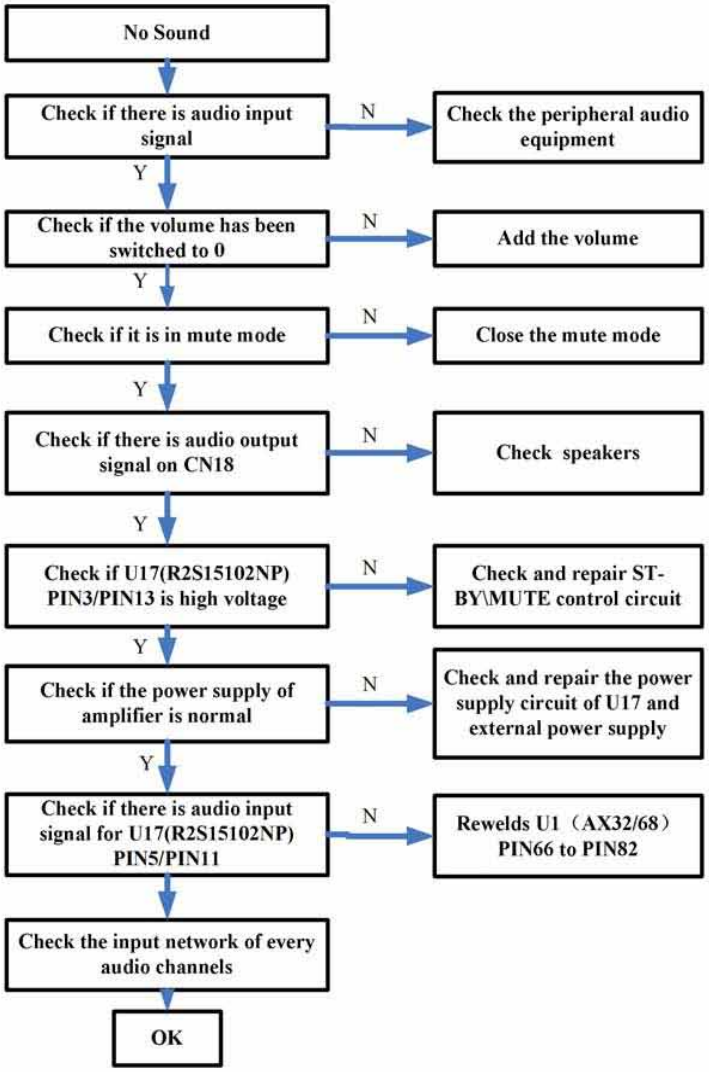

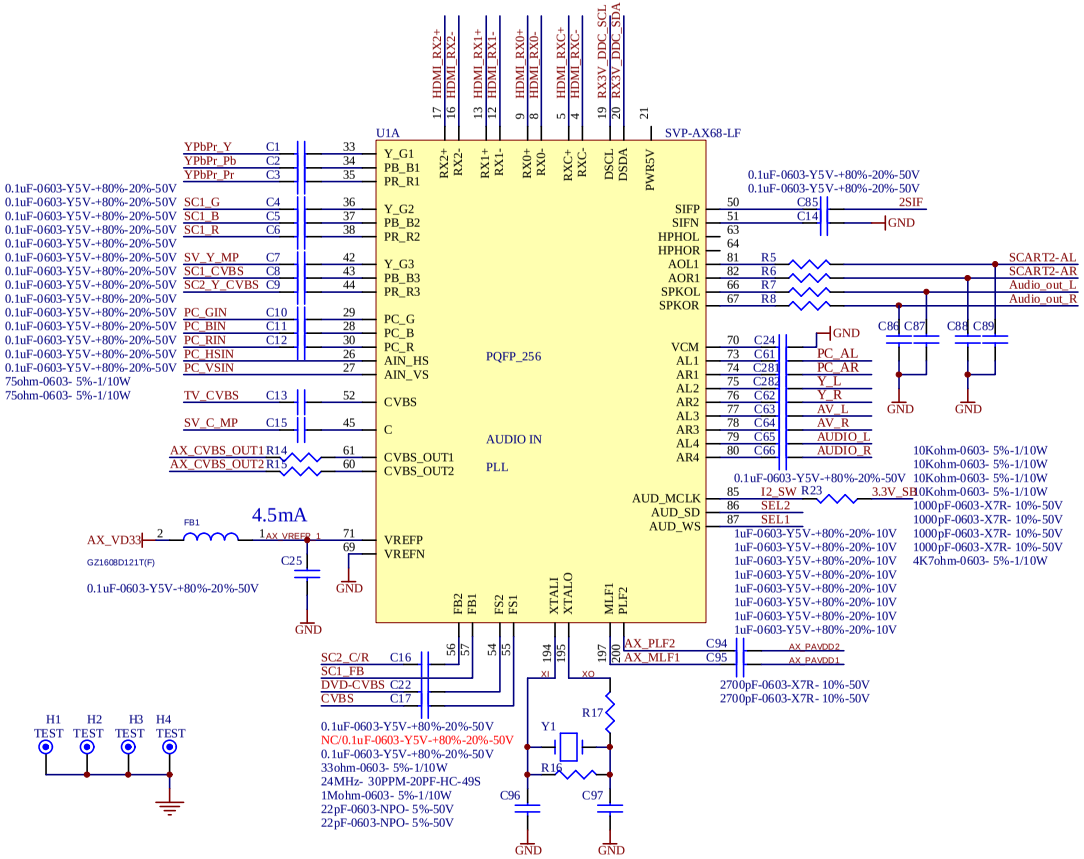

01_SVP-AX-1

Title		
Size B	Number	Revision
Date:		
File:		

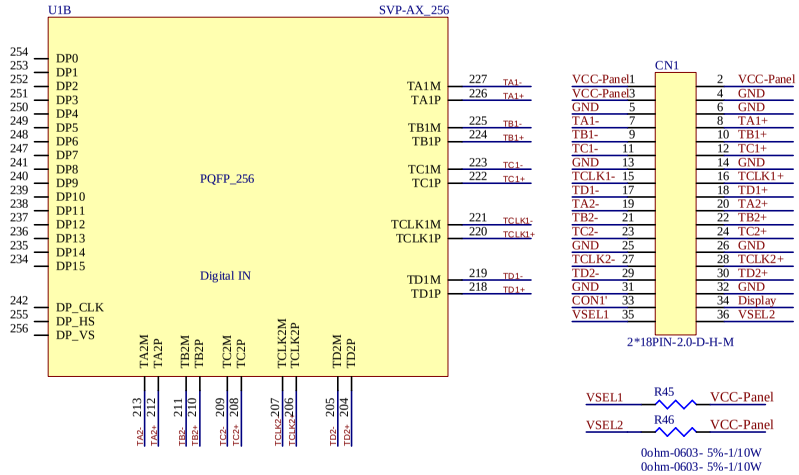

02_SVP-AX-2

Title		
Size B	Number	Revision
Date: File:		

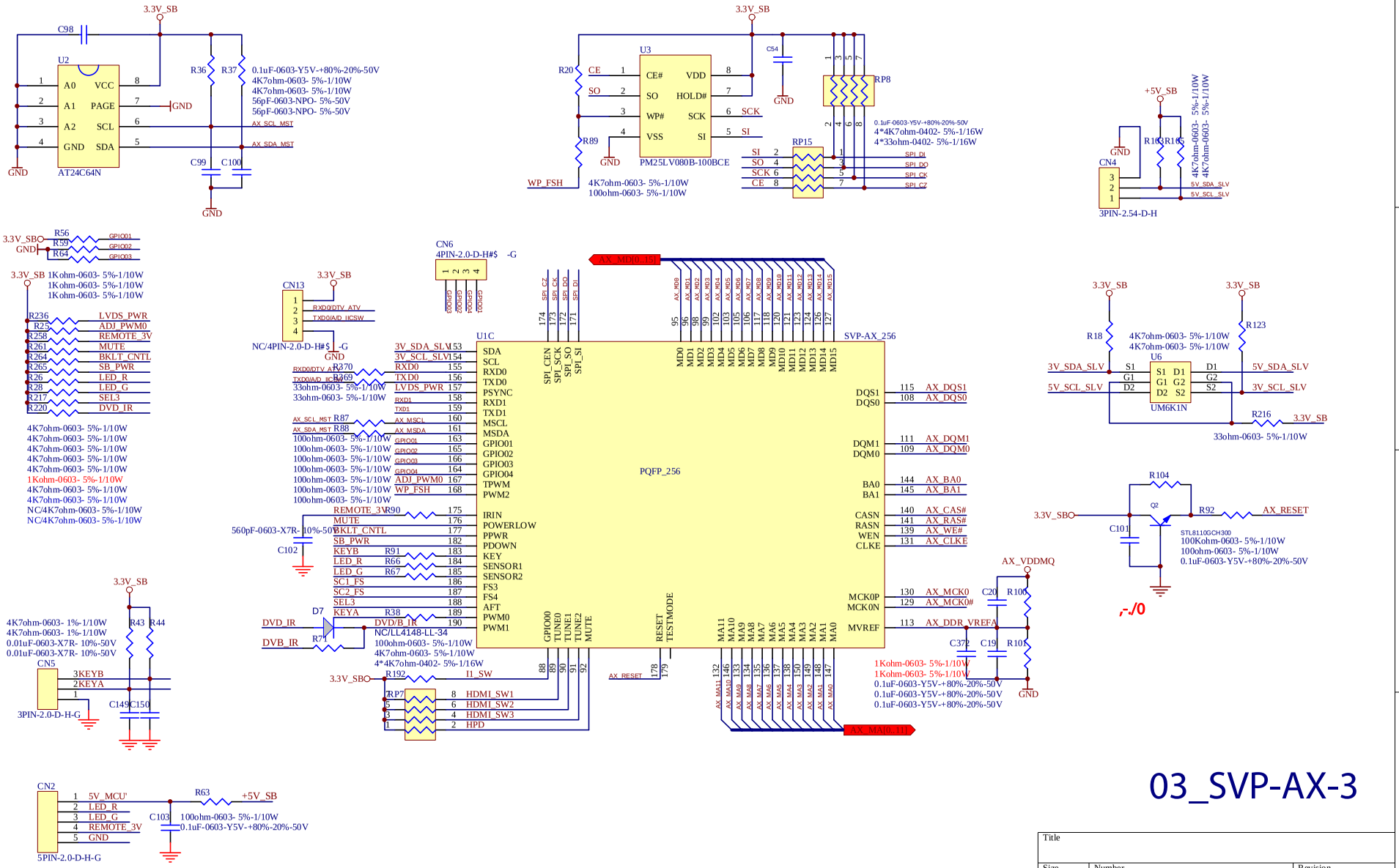

Title		
Size B	Number	Revision
Date:		
File:		

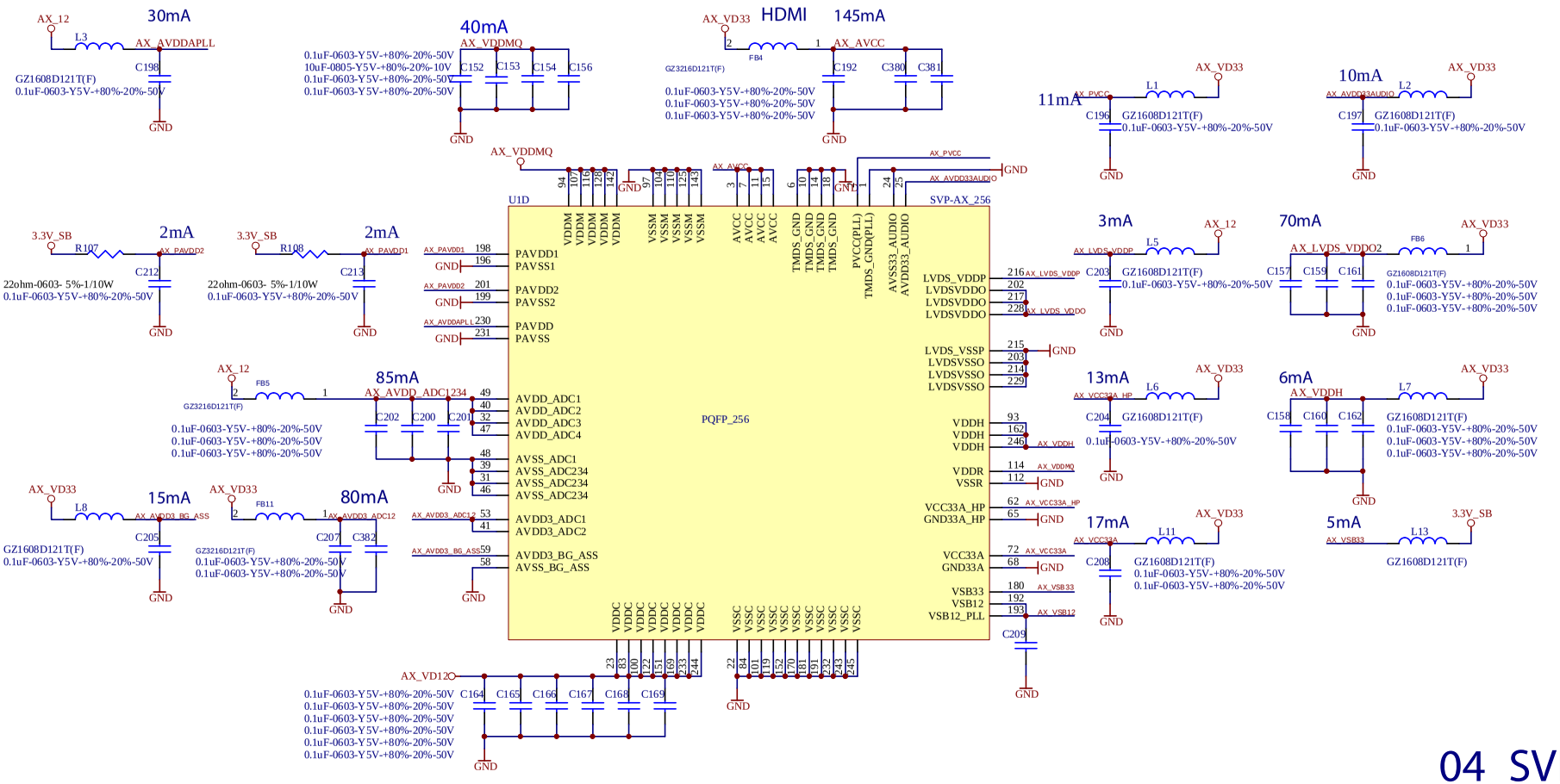

04_SVP-AX-4

Title		
Size B	Number	Revision
Date:		
File:		

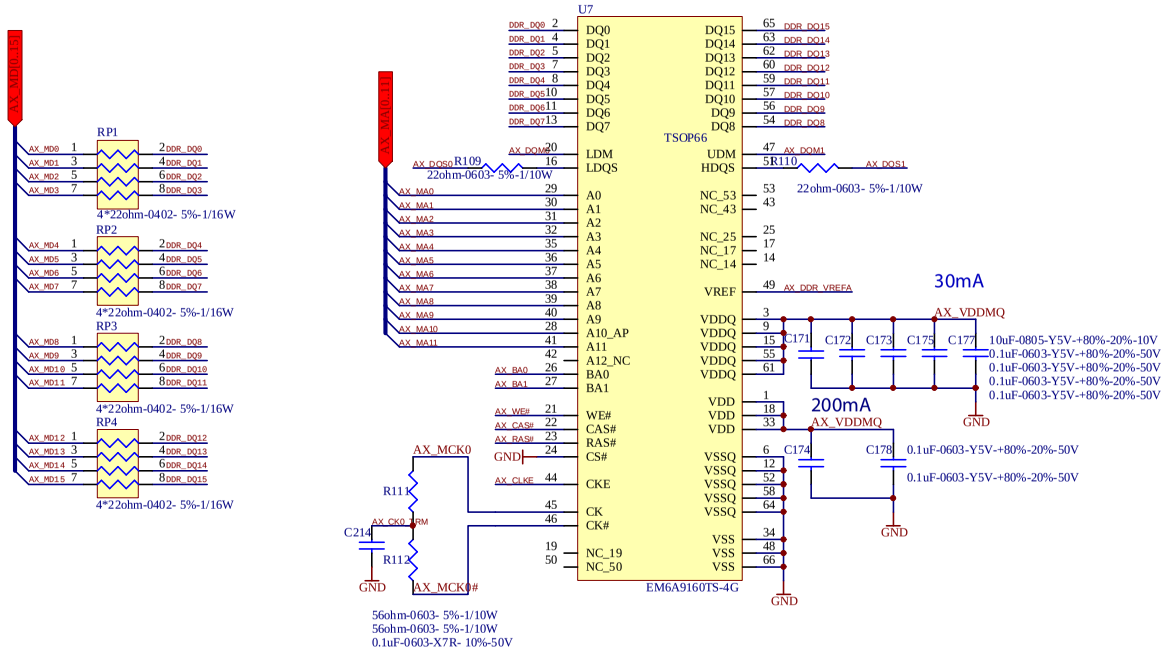

05_SVP-PX_8Mx16_DDR

Title		
Size B	Number	Revision
Date:		
File:		

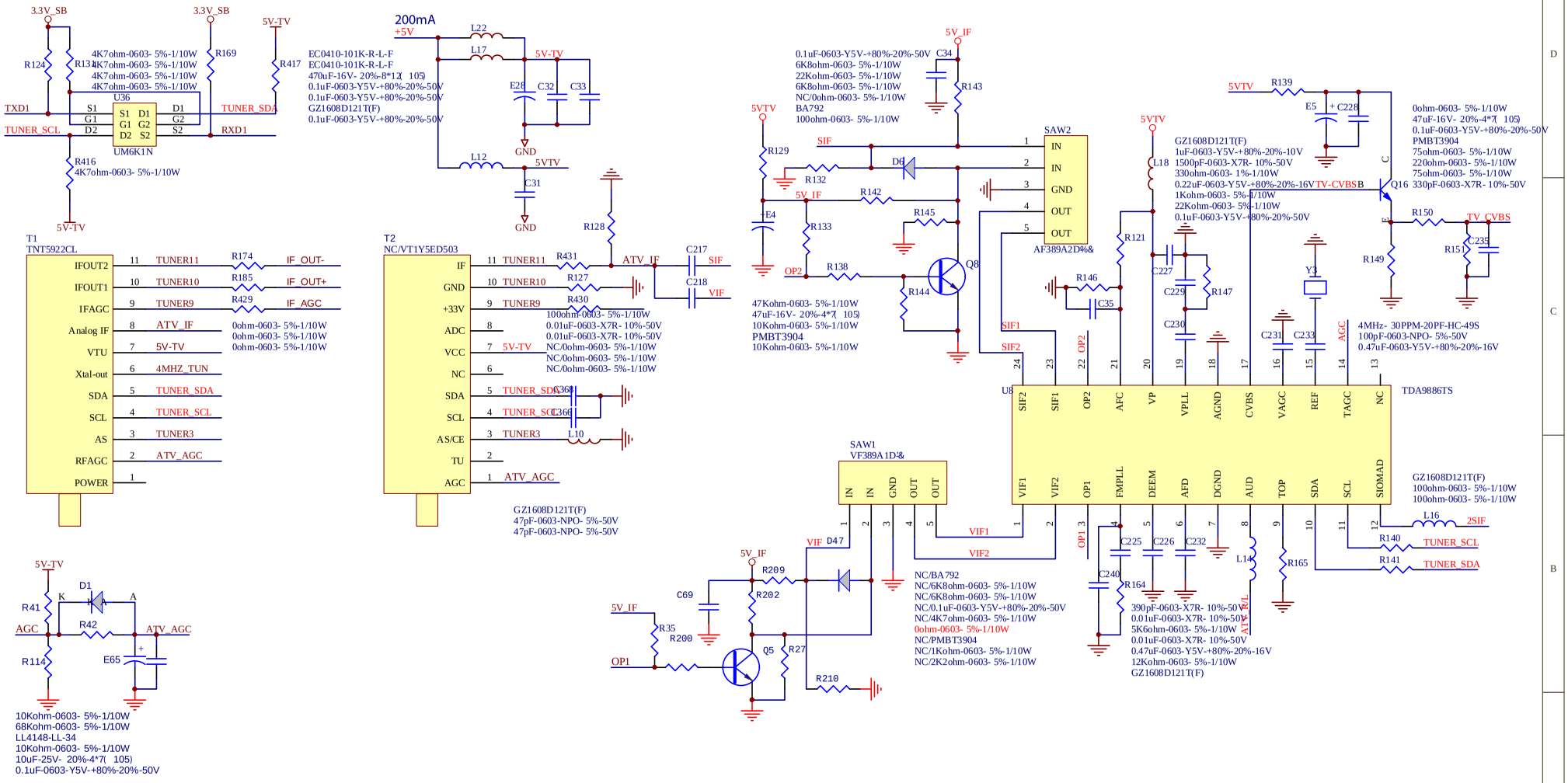
3.3V_SB
3.3V_SB
5V-TV
R124
R134
4K7ohm-0603- 5%-1/10W
4K7ohm-0603- 5%-1/10W
4K7ohm-0603- 5%-1/10W
4K7ohm-0603- 5%-1/10W
R169
R417
U36
UM6K1N
TXD1
TUNER_SCL
TUNER_SDA
RXD1
R416
4K7ohm-0603- 5%-1/10W
5V-TV
200mA
+5V
L22
L17
5V-TV
E28
C32
C33
GND
L12
5VTV
C31
GND
EC0410-101K-R-L-F
EC0410-101K-R-L-F
470uF-16V- 20%-8*12(105)
0.1uF-0603-Y5V-+80%-20%-50V
0.1uF-0603-Y5V-+80%-20%-50V
GZ1608D121T(F)
0.1uF-0603-Y5V-+80%-20%-50V
T1
TNT5922CL
IFOUT2
IFOUT1
IFAGC
Analog IF
VTU
Xtal-out
SDA
SCL
AS
RFAGC
POWER
TUNER11
TUNER10
TUNER9
ATV_IF
5V-TV
4MHZ_TUN
TUNER_SDA
TUNER_SCL
TUNER3
ATV_AGC
R174
R185
R429
IF_OUT-
IF_OUT+
IF_AGC
0ohm-0603- 5%-1/10W
0ohm-0603- 5%-1/10W
0ohm-0603- 5%-1/10W
T2
NC/VT1Y5ED503
IF
GND
+33V
ADC
VCC
NC
SDA
SCL
AS/CE
TU
AGC
R128
R431
R127
R430
ATV_IF
C217
C218
SIF
VIF
C368
C366
L10
100ohm-0603- 5%-1/10W
0.01uF-0603-X7R- 10%-50V
0.01uF-0603-X7R- 10%-50V
NC/0ohm-0603- 5%-1/10W
NC/0ohm-0603- 5%-1/10W
NC/0ohm-0603- 5%-1/10W
GZ1608D121T(F)
47pF-0603-NPO- 5%-50V
47pF-0603-NPO- 5%-50V
5V-TV
D1
K
A
R41
AGC
R42
ATV_AGC
R114
E65
10Kohm-0603- 5%-1/10W
68Kohm-0603- 5%-1/10W
LL4148-LL-34
10Kohm-0603- 5%-1/10W
10uF-25V- 20%-4*7(105)
0.1uF-0603-Y5V-+80%-20%-50V
5V_IF
C34
R143
0.1uF-0603-Y5V-+80%-20%-50V
6K8ohm-0603- 5%-1/10W
22Kohm-0603- 5%-1/10W
6K8ohm-0603- 5%-1/10W
NC/0ohm-0603- 5%-1/10W
BA792
100ohm-0603- 5%-1/10W
5VTV
R129
SIF
R132
D6
5V_IF
R142
E4
R133
OP2
R138
R145
Q8
R144
47Kohm-0603- 5%-1/10W
47uF-16V- 20%-4*7(105)
10Kohm-0603- 5%-1/10W
PMBT3904
10Kohm-0603- 5%-1/10W
SAW2
AF389A2D%&
IN
IN
GND
OUT
OUT
5VTV
R139
E5
C228
GZ1608D121T(F)
1uF-0603-Y5V-+80%-20%-10V
1500pF-0603-X7R- 10%-50V
330ohm-0603- 1%-1/10W
0.22uF-0603-Y5V-+80%-20%-16V
1Kohm-0603- 5%-1/10W
22Kohm-0603- 5%-1/10W
0.1uF-0603-Y5V-+80%-20%-50V
L18
R121
C227
C229
R147
C230
R146
C35
TV-CVBS
Q16
0ohm-0603- 5%-1/10W
47uF-16V- 20%-4*7(105)
0.1uF-0603-Y5V-+80%-20%-50V
PMBT3904
75ohm-0603- 5%-1/10W
220ohm-0603- 5%-1/10W
75ohm-0603- 5%-1/10W
330pF-0603-X7R- 10%-50V
R150
TV_CVBS
R151
C235
R149
Y2
C231
C233
4MHz- 30PPM-20PF-HC-49S
100pF-0603-NPO- 5%-50V
0.47uF-0603-Y5V-+80%-20%-16V
SIF1
SIF2
OP2
AGC
U8
TDA9886TS
SIF2
SIF1
OP2
AFC
VP
VPLL
AGND
CVBS
VAGC
REF
TAGC
NC
VIF1
VIF2
OP1
FMPLL
DEEM
AFD
DGND
AUD
TOP
SDA
SCL
SIOMAD
GZ1608D121T(F)
100ohm-0603- 5%-1/10W
100ohm-0603- 5%-1/10W
L16
2SIF
R140
TUNER_SCL
R141
TUNER_SDA
SAW1
VF389A1D%&
IN
IN
GND
OUT
OUT
VIF1
VIF2
VIF
D47
5V_IF
R209
R202
C69
5V_IF
R35
R200
OP1
Q5
R27
R210
NC/BA792
NC/6K8ohm-0603- 5%-1/10W
NC/6K8ohm-0603- 5%-1/10W
NC/0.1uF-0603-Y5V-+80%-20%-50V
NC/4K7ohm-0603- 5%-1/10W
0ohm-0603- 5%-1/10W
NC/PMBT3904
NC/1Kohm-0603- 5%-1/10W
NC/2K2ohm-0603- 5%-1/10W
C225
C226
C232
C240
R164
L14
R165
390pF-0603-X7R- 10%-50V
0.01uF-0603-X7R- 10%-50V
5K6ohm-0603- 5%-1/10W
0.01uF-0603-X7R- 10%-50V
0.47uF-0603-Y5V-+80%-20%-16V
12Kohm-0603- 5%-1/10W
GZ1608D121T(F)
06_TUNER
Title
Size
B
Number
Revision
Date:
File:

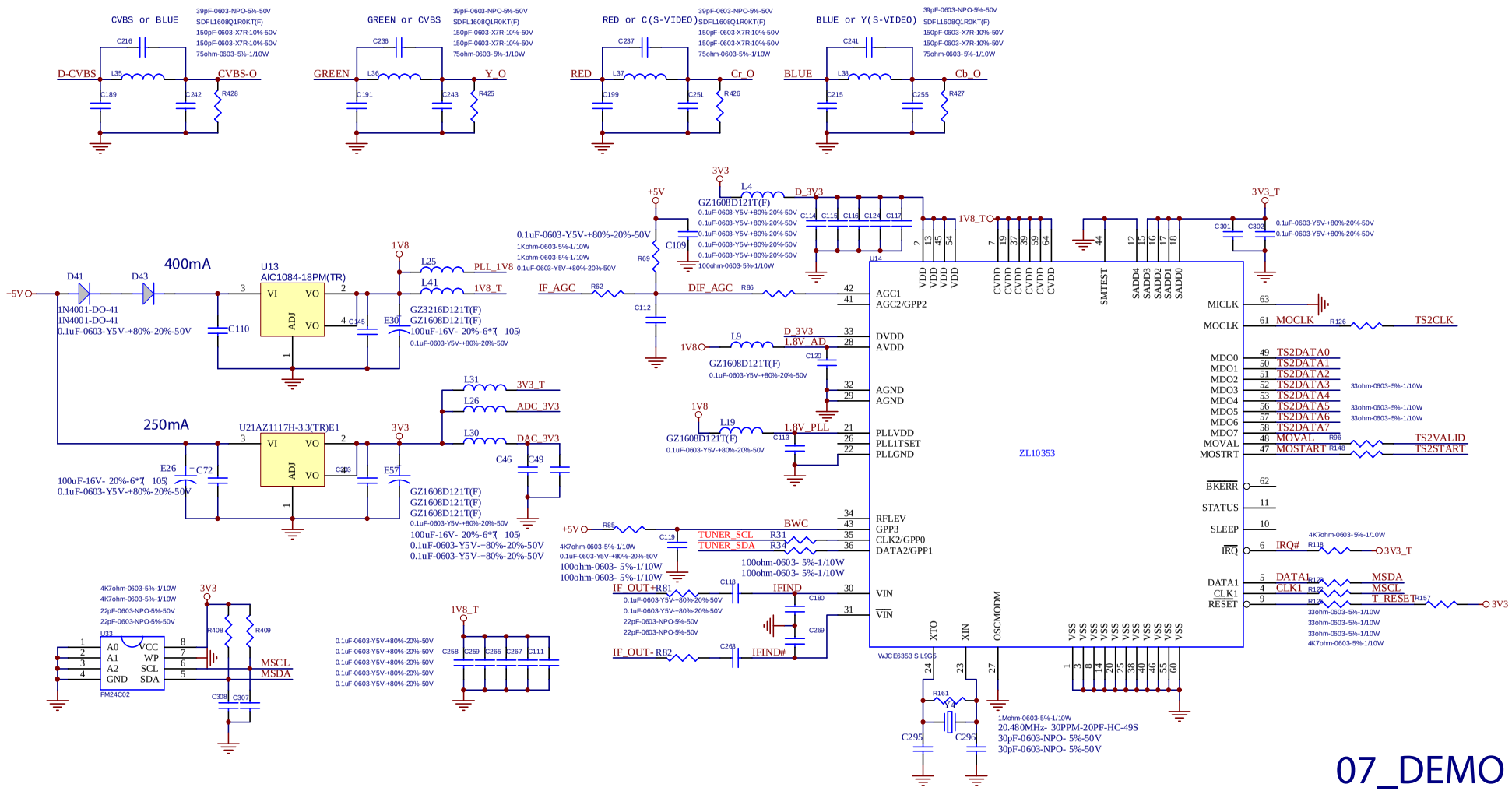

Title		
Size B	Number	Revision
Date:		
File:		

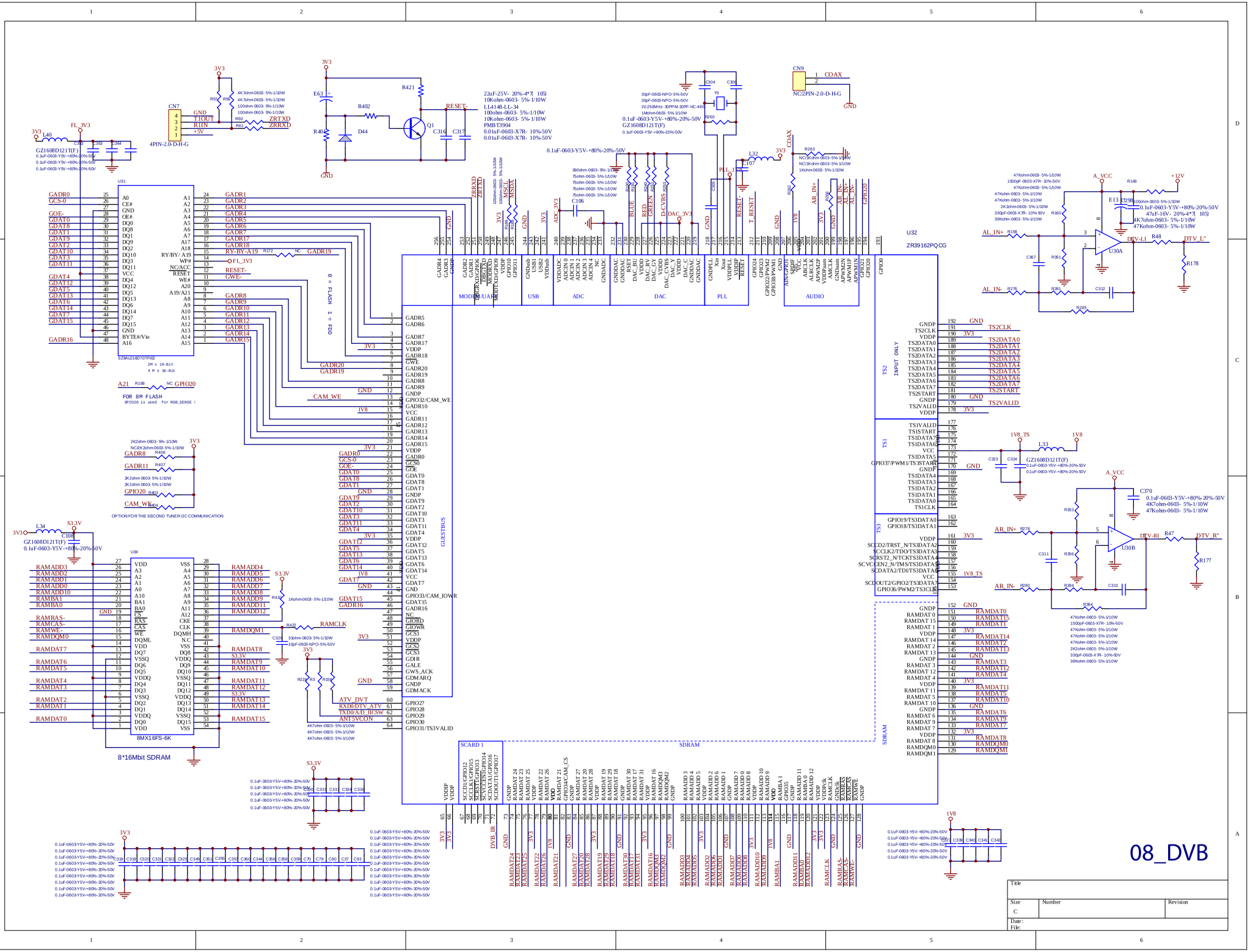

Title		
Size C	Number	Revision
Date:		
File:		

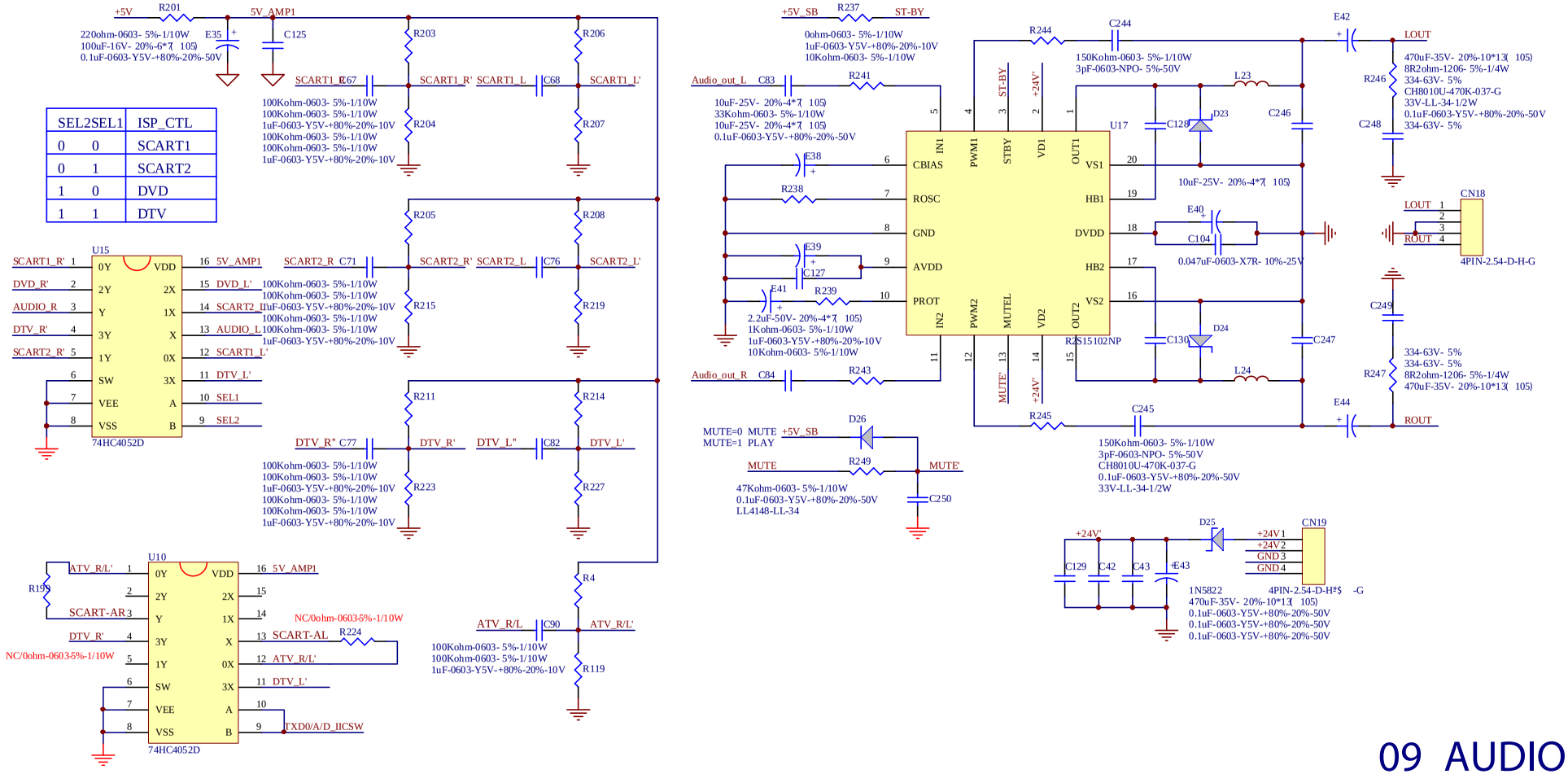

09_AUDIO

Title		
Size B	Number	Revision
Date:		
File:		

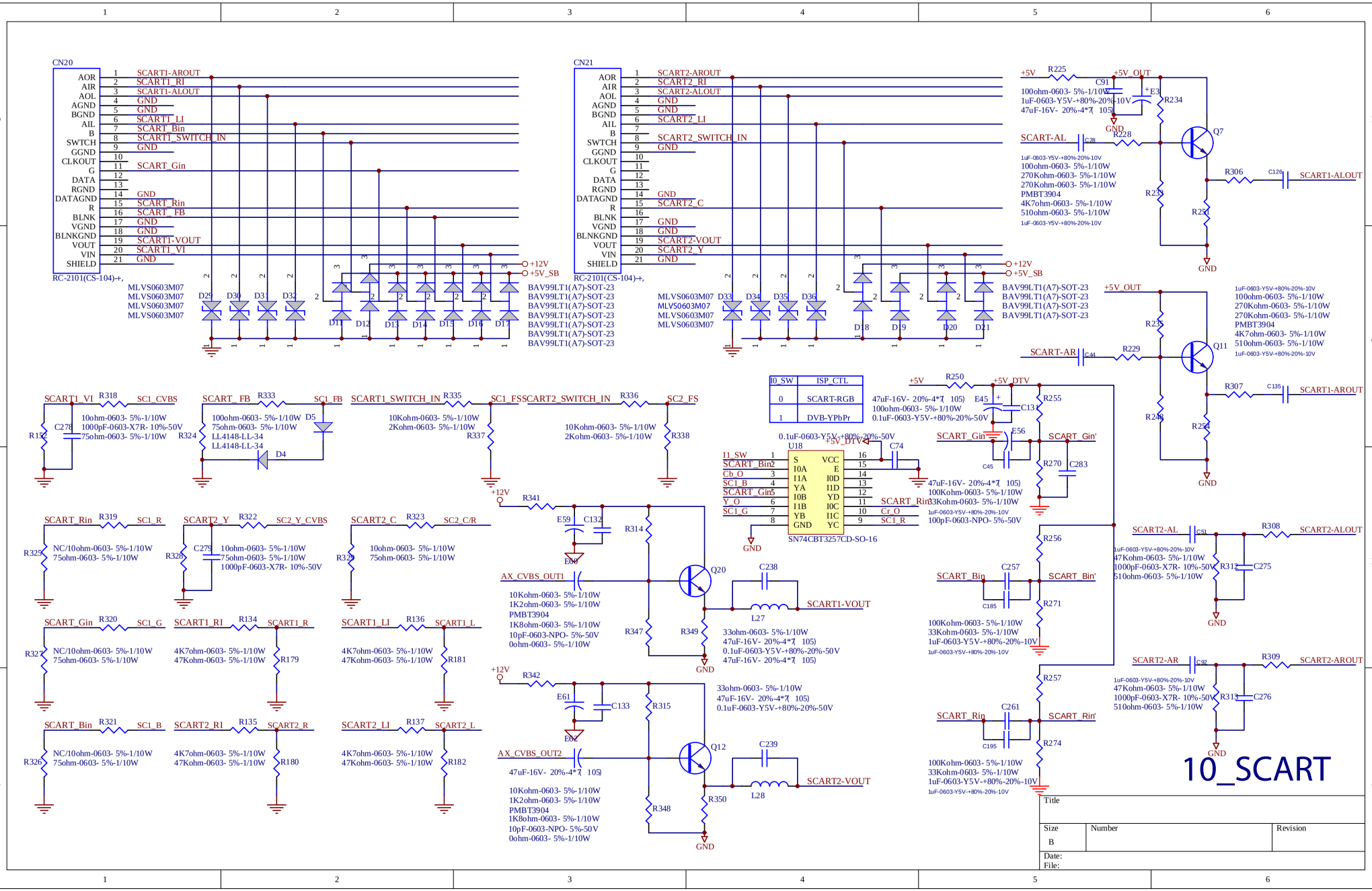
CN20
RC-2101(CS-104)-+,
AOR 1 SCART1-AROUT
AIR 2 SCART1_RI
AOL 3 SCART1-ALOUT
AGND 4 GND
BGND 5 GND
AIL 6 SCART1_LI
B 7 SCART_Bin
SWTCH 8 SCART1_SWITCH_IN
GGND 9 GND
CLKOUT 10
G 11 SCART_Gin
DATA 12
RGND 13
DATAGND 14 GND
R 15 SCART_Rin
BLNK 16 SCART_FB
VGND 17 GND
BLNKGND 18 GND
VOUT 19 SCART1-VOUT
VIN 20 SCART1_VI
SHIELD 21 GND
CN21
RC-2101(CS-104)-+,
AOR 1 SCART2-AROUT
AIR 2 SCART2_RI
AOL 3 SCART2-ALOUT
AGND 4 GND
BGND 5 GND
AIL 6 SCART2_LI
B 7
SWTCH 8 SCART2_SWITCH_IN
GGND 9 GND
CLKOUT 10
G 11
DATA 12
RGND 13
DATAGND 14 GND
R 15 SCART2_C
BLNK 16
VGND 17 GND
BLNKGND 18 GND
VOUT 19 SCART2-VOUT
VIN 20 SCART2_Y
SHIELD 21 GND
+12V
+5V_SB
MLVS0603M07
BAV99LT1(A7)-SOT-23
D29 D30 D31 D32 D11 D12 D13 D14 D15 D16 D17
D33 D34 D35 D36 D18 D19 D20 D21
+5V R225 +5V_OUT
C91 E3
100ohm-0603- 5%-1/10W
1uF-0603-Y5V-+80%-20%-10V
47uF-16V- 20%-4*7(105)
GND
R234
SCART-AL C28
R228
Q7
1uF-0603-Y5V-+80%-20%-10V
100ohm-0603- 5%-1/10W
270Kohm-0603- 5%-1/10W
270Kohm-0603- 5%-1/10W
PMBT3904
4K7ohm-0603- 5%-1/10W
510ohm-0603- 5%-1/10W
1uF-0603-Y5V-+80%-20%-10V
R306 C126 SCART1-ALOUT
R223 R251
GND
+5V_OUT
R235 R248
SCART-AR C44 R229
Q11
R307 C135 SCART1-AROUT
R236 R252
GND
SCART1_VI R318 SC1_CVBS
10ohm-0603- 5%-1/10W
1000pF-0603-X7R- 10%-50V
75ohm-0603- 5%-1/10W
R322 C278 R324
SCART_ FB R333 SC1_FB
100ohm-0603- 5%-1/10W
75ohm-0603- 5%-1/10W
LL4148-LL-34
LL4148-LL-34
D5 D4
SCART1_SWITCH_IN R335 SC1_FS
10Kohm-0603- 5%-1/10W
2Kohm-0603- 5%-1/10W
R337
SCART2_SWITCH_IN R336 SC2_FS
10Kohm-0603- 5%-1/10W
2Kohm-0603- 5%-1/10W
R338
I0_SW ISP_CTL
0 SCART-RGB
1 DVB-YPbPr
+5V R250 +5V_DTV
47uF-16V- 20%-4*7(105) E45
100ohm-0603- 5%-1/10W C13
0.1uF-0603-Y5V-+80%-20%-50V
R255
SCART_Gin E56 SCART_Gin'
C45 R270 C283
0.1uF-0603-Y5V-+80%-20%-50V
+5V_DTV
U18
I1_SW 1
SCART_Bin 2
Cb_O 3
SC1_B 4
SCART_Gin 5
Y_O 6
SC1_G 7
8
S VCC 16
I0A E 15
I1A I0D 14
YA I1D 13
I0B YD 12
I1B I0C 11
YB I1C 10
GND YC 9
C74
47uF-16V- 20%-4*7(105)
100Kohm-0603- 5%-1/10W
33Kohm-0603- 5%-1/10W
1uF-0603-Y5V-+80%-20%-10V
100pF-0603-NPO- 5%-50V
SCART_Rin
Cr_O
SC1_R
SN74CBT3257CD-SO-16
GND
SCART_Rin R319 SC1_R
NC/10ohm-0603- 5%-1/10W
75ohm-0603- 5%-1/10W
R325
SCART2_Y R322 SC2_Y_CVBS
10ohm-0603- 5%-1/10W
75ohm-0603- 5%-1/10W
1000pF-0603-X7R- 10%-50V
R328 C279
SCART2_C R323 SC2_C/R
10ohm-0603- 5%-1/10W
75ohm-0603- 5%-1/10W
R329
+12V R341
E59 C132
E60
R314
AX_CVBS_OUT1
10Kohm-0603- 5%-1/10W
1K2ohm-0603- 5%-1/10W
PMBT3904
1K8ohm-0603- 5%-1/10W
10pF-0603-NPO- 5%-50V
0ohm-0603- 5%-1/10W
Q20
C238
L27
SCART1-VOUT
R347 R349
33ohm-0603- 5%-1/10W
47uF-16V- 20%-4*7(105)
0.1uF-0603-Y5V-+80%-20%-50V
47uF-16V- 20%-4*7(105)
GND
SCART2-AL C51 R308 SCART2-ALOUT
1uF-0603-Y5V-+80%-20%-10V
47Kohm-0603- 5%-1/10W
1000pF-0603-X7R- 10%-50V
510ohm-0603- 5%-1/10W
R312 C275
GND
R256
SCART_Bin C257 SCART_Bin'
C185 R271
100Kohm-0603- 5%-1/10W
33Kohm-0603- 5%-1/10W
1uF-0603-Y5V-+80%-20%-10V
1uF-0603-Y5V-+80%-20%-10V
SCART_Gin R320 SC1_G
NC/10ohm-0603- 5%-1/10W
75ohm-0603- 5%-1/10W
R327
SCART1_RI R134 SCART1_R
4K7ohm-0603- 5%-1/10W
47Kohm-0603- 5%-1/10W
R179
SCART1_LI R136 SCART1_L
4K7ohm-0603- 5%-1/10W
47Kohm-0603- 5%-1/10W
R181
+12V R342
E61 C133
E62
R315
33ohm-0603- 5%-1/10W
47uF-16V- 20%-4*7(105)
0.1uF-0603-Y5V-+80%-20%-50V
AX_CVBS_OUT2
47uF-16V- 20%-4*7(105)
10Kohm-0603- 5%-1/10W
1K2ohm-0603- 5%-1/10W
PMBT3904
1K8ohm-0603- 5%-1/10W
10pF-0603-NPO- 5%-50V
0ohm-0603- 5%-1/10W
Q12
C239
L28
SCART2-VOUT
R348 R350
GND
SCART2-AR C92 R309 SCART2-AROUT
1uF-0603-Y5V-+80%-20%-10V
47Kohm-0603- 5%-1/10W
1000pF-0603-X7R- 10%-50V
510ohm-0603- 5%-1/10W
R313 C276
GND
R257
SCART_Rin C261 SCART_Rin'
C195 R274
100Kohm-0603- 5%-1/10W
33Kohm-0603- 5%-1/10W
1uF-0603-Y5V-+80%-20%-10V
1uF-0603-Y5V-+80%-20%-10V
SCART_Bin R321 SC1_B
NC/10ohm-0603- 5%-1/10W
75ohm-0603- 5%-1/10W
R326
SCART2_RI R135 SCART2_R
4K7ohm-0603- 5%-1/10W
47Kohm-0603- 5%-1/10W
R180
SCART2_LI R137 SCART2_L
4K7ohm-0603- 5%-1/10W
47Kohm-0603- 5%-1/10W
R182
10_SCART
Title
Size B
Number
Revision
Date:
File:

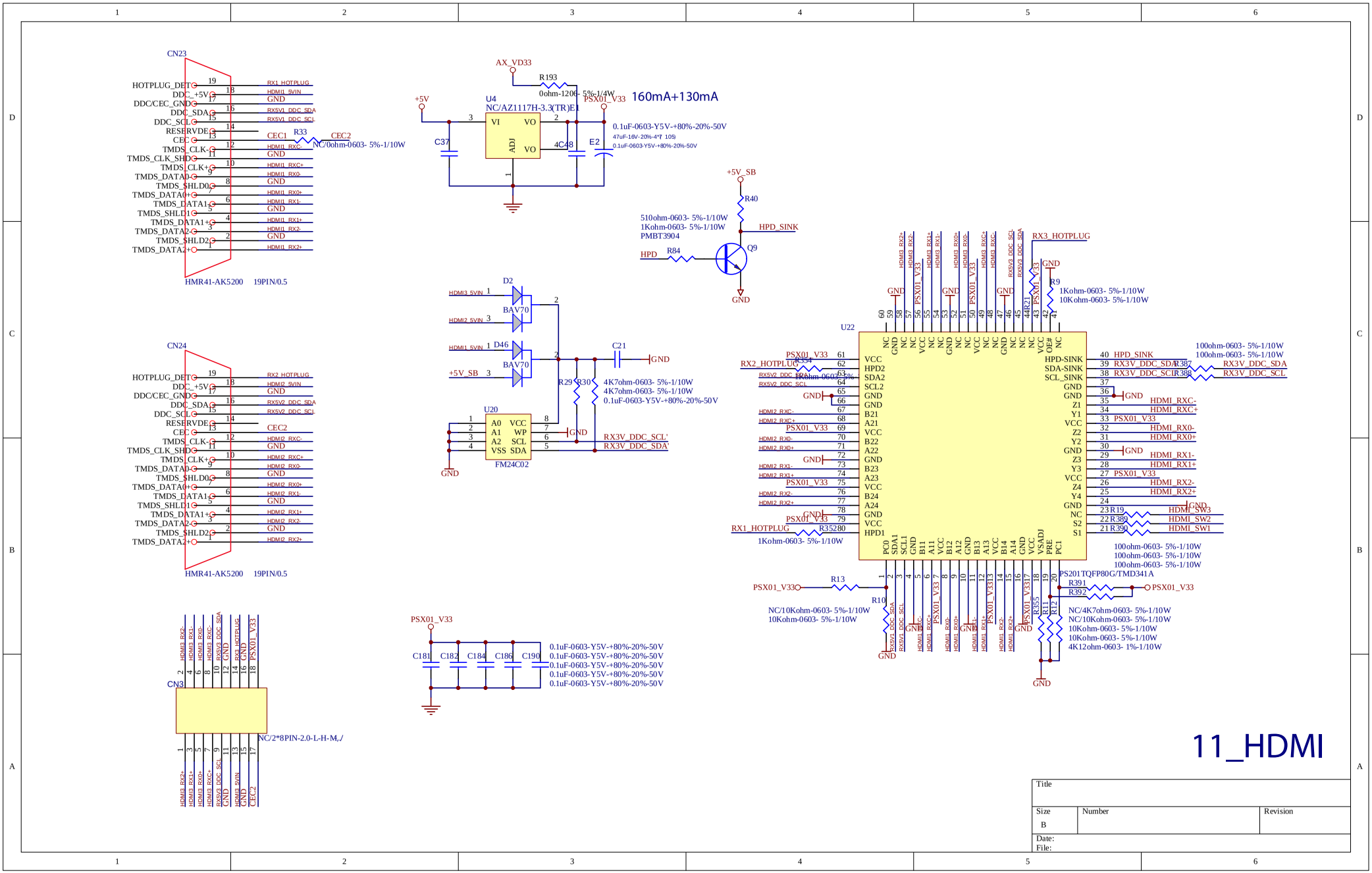

CN23
HOTPLUG_DET
DDC_+5V
DDC/CEC_GND
DDC_SDA
DDC_SCL
RESERVDE
CEC
TMDS_CLK-
TMDS_CLK_SHD
TMDS_CLK+
TMDS_DATA0-
TMDS_SHLD0
TMDS_DATA0+
TMDS_DATA1-
TMDS_SHLD1
TMDS_DATA1+
TMDS_DATA2-
TMDS_SHLD2
TMDS_DATA2+
HMR41-AK5200 19PIN/0.5
CEC1
R33
CEC2
NC/0ohm-0603- 5%-1/10W
AX_VD33
R193
0ohm-1206- 5%-1/4W
PSX01_V33
160mA+130mA
+5V
U4
NC/AZ1117H-3.3(TR)E1
VI
VO
ADJ
C37
4C48
E2
0.1uF-0603-Y5V-+80%-20%-50V
47uF-16V-20%-4*7 105)
0.1uF-0603-Y5V-+80%-20%-50V
+5V_SB
R40
510ohm-0603- 5%-1/10W
1Kohm-0603- 5%-1/10W
PMBT3904
HPD_SINK
HPD
R84
Q9
GND
D2
BAV70
D46
BAV70
C21
R29
R30
4K7ohm-0603- 5%-1/10W
4K7ohm-0603- 5%-1/10W
0.1uF-0603-Y5V-+80%-20%-50V
U20
FM24C02
RX3V_DDC_SCL'
RX3V_DDC_SDA'
CN24
HMR41-AK5200 19PIN/0.5
CEC2
CN3
NC/2*8PIN-2.0-L-H-M,/
C181
C182
C184
C186
C190
0.1uF-0603-Y5V-+80%-20%-50V
0.1uF-0603-Y5V-+80%-20%-50V
0.1uF-0603-Y5V-+80%-20%-50V
0.1uF-0603-Y5V-+80%-20%-50V
0.1uF-0603-Y5V-+80%-20%-50V
RX3_HOTPLUG
R9
1Kohm-0603- 5%-1/10W
10Kohm-0603- 5%-1/10W
U22
RX2_HOTPLUG
R354
1Kohm-0603- 5%-1/10W
RX1_HOTPLUG
R35280
1Kohm-0603- 5%-1/10W
HPD-SINK
SDA-SINK
SCL_SINK
RX3V_DDC_SDA
RX3V_DDC_SCL
R387
R388
100ohm-0603- 5%-1/10W
100ohm-0603- 5%-1/10W
HDMI_RXC-
HDMI_RXC+
HDMI_RX0-
HDMI_RX0+
HDMI_RX1-
HDMI_RX1+
HDMI_RX2-
HDMI_RX2+
R19
R389
R390
HDMI_SW3
HDMI_SW2
HDMI_SW1
100ohm-0603- 5%-1/10W
100ohm-0603- 5%-1/10W
100ohm-0603- 5%-1/10W
PS201TQFP80G/TMD341A
R13
R10
NC/10Kohm-0603- 5%-1/10W
10Kohm-0603- 5%-1/10W
R391
R392
R355
R11
R12
NC/4K7ohm-0603- 5%-1/10W
NC/10Kohm-0603- 5%-1/10W
10Kohm-0603- 5%-1/10W
10Kohm-0603- 5%-1/10W
4K12ohm-0603- 1%-1/10W
11_HDMI
Title
Size
B
Number
Revision
Date:
File:

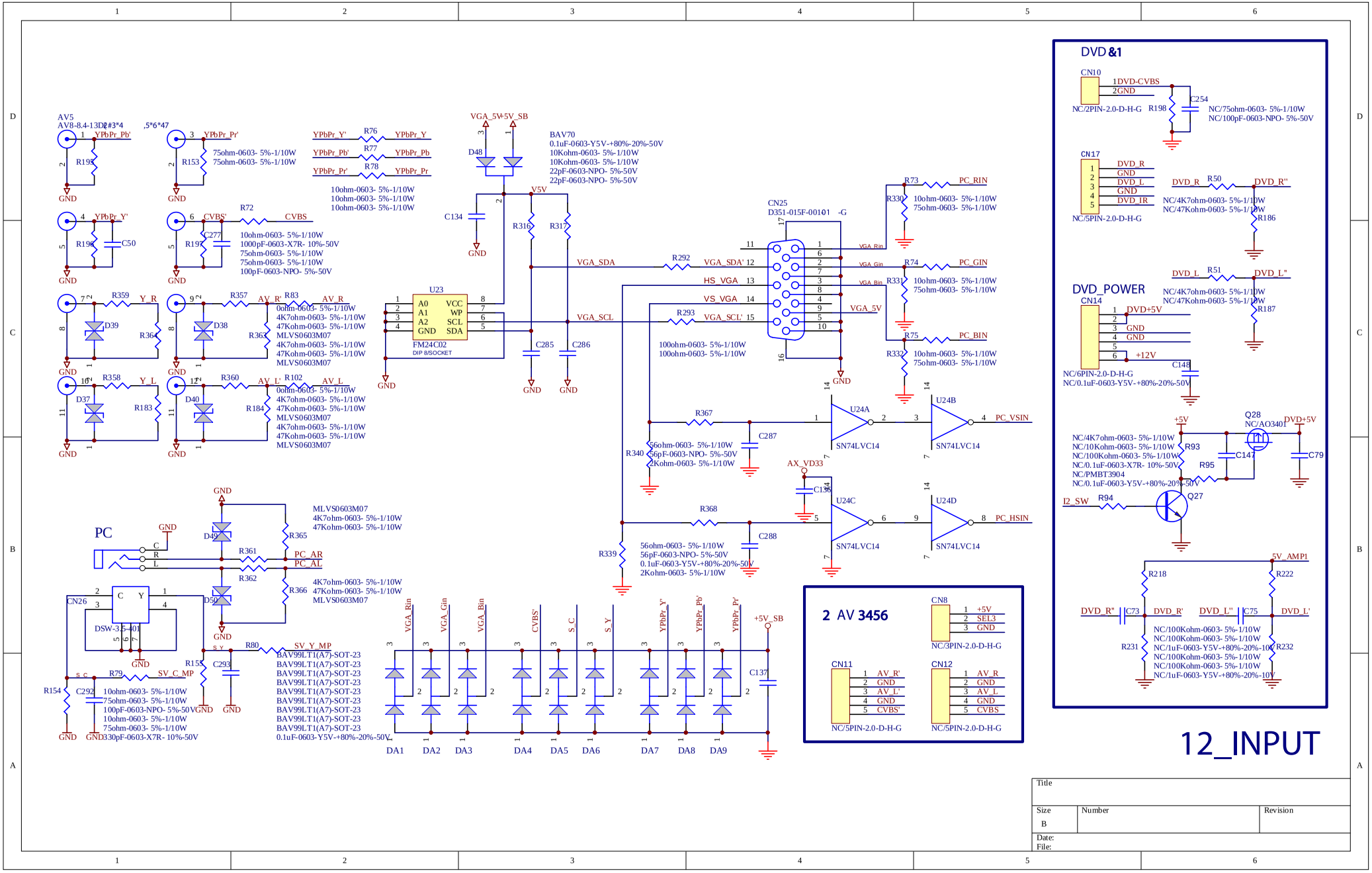
AV5
AV8-8.4-13D2#3*4
,5*6*47
YPbPr_Pb'
YPbPr_Pr'
R195
R153
75ohm-0603- 5%-1/10W
75ohm-0603- 5%-1/10W
YPbPr_Y'
R76
YPbPr_Y
YPbPr_Pb'
R77
YPbPr_Pb
YPbPr_Pr'
R78
YPbPr_Pr
10ohm-0603- 5%-1/10W
10ohm-0603- 5%-1/10W
10ohm-0603- 5%-1/10W
R196
C50
CVBS'
R72
CVBS
R197
C277
10ohm-0603- 5%-1/10W
1000pF-0603-X7R- 10%-50V
75ohm-0603- 5%-1/10W
75ohm-0603- 5%-1/10W
100pF-0603-NPO- 5%-50V
R359
Y_R
D39
R364
R357
AV_R'
R83
AV_R
D38
R363
0ohm-0603- 5%-1/10W
4K7ohm-0603- 5%-1/10W
47Kohm-0603- 5%-1/10W
MLVS0603M07
4K7ohm-0603- 5%-1/10W
47Kohm-0603- 5%-1/10W
MLVS0603M07
R358
Y_L
D37
R183
R360
AV_L'
R102
AV_L
D40
R184
0ohm-0603- 5%-1/10W
4K7ohm-0603- 5%-1/10W
47Kohm-0603- 5%-1/10W
MLVS0603M07
4K7ohm-0603- 5%-1/10W
47Kohm-0603- 5%-1/10W
MLVS0603M07
GND
VGA_5V
+5V_SB
D48
BAV70
0.1uF-0603-Y5V-+80%-20%-50V
10Kohm-0603- 5%-1/10W
10Kohm-0603- 5%-1/10W
22pF-0603-NPO- 5%-50V
22pF-0603-NPO- 5%-50V
V5V
C134
R316
R317
U23
A0
A1
A2
GND
VCC
WP
SCL
SDA
FM24C02
DIP 8/SOCKET
VGA_SDA
VGA_SCL
C285
C286
R292
R293
VGA_SDA'
HS_VGA
VS_VGA
VGA_SCL'
100ohm-0603- 5%-1/10W
100ohm-0603- 5%-1/10W
CN25
D351-015F-00101 -G
VGA_Rin
VGA_Gin
VGA_Bin
VGA_5V
R73
PC_RIN
R330
10ohm-0603- 5%-1/10W
75ohm-0603- 5%-1/10W
R74
PC_GIN
R331
10ohm-0603- 5%-1/10W
75ohm-0603- 5%-1/10W
R75
PC_BIN
R332
10ohm-0603- 5%-1/10W
75ohm-0603- 5%-1/10W
R367
C287
U24A
SN74LVC14
U24B
SN74LVC14
PC_VSIN
R340
56ohm-0603- 5%-1/10W
56pF-0603-NPO- 5%-50V
2Kohm-0603- 5%-1/10W
AX_VD33
C136
R368
C288
U24C
SN74LVC14
U24D
SN74LVC14
PC_HSIN
R339
56ohm-0603- 5%-1/10W
56pF-0603-NPO- 5%-50V
0.1uF-0603-Y5V-+80%-20%-50V
2Kohm-0603- 5%-1/10W
PC
C
R
L
D49
R365
R361
PC_AR
PC_AL
R362
D50
R366
MLVS0603M07
4K7ohm-0603- 5%-1/10W
47Kohm-0603- 5%-1/10W
MLVS0603M07
4K7ohm-0603- 5%-1/10W
47Kohm-0603- 5%-1/10W
MLVS0603M07
CN26
C
Y
DSW-3.5-401
S_C
S_Y
R80
SV_Y_MP
R79
SV_C_MP
R154
C292
10ohm-0603- 5%-1/10W
75ohm-0603- 5%-1/10W
100pF-0603-NPO- 5%-50V
10ohm-0603- 5%-1/10W
75ohm-0603- 5%-1/10W
330pF-0603-X7R- 10%-50V
R155
C293
BAV99LT1(A7)-SOT-23
BAV99LT1(A7)-SOT-23
BAV99LT1(A7)-SOT-23
BAV99LT1(A7)-SOT-23
BAV99LT1(A7)-SOT-23
BAV99LT1(A7)-SOT-23
BAV99LT1(A7)-SOT-23
BAV99LT1(A7)-SOT-23
BAV99LT1(A7)-SOT-23
0.1uF-0603-Y5V-+80%-20%-50V
VGA_Rin
VGA_Gin
VGA_Bin
CVBS'
S_C
S_Y
YPbPr_Y'
YPbPr_Pb'
YPbPr_Pr'
+5V_SB
C137
DA1
DA2
DA3
DA4
DA5
DA6
DA7
DA8
DA9
2 AV 3456
CN8
+5V
SEL3
GND
NC/3PIN-2.0-D-H-G
CN11
AV_R'
GND
AV_L'
GND
CVBS'
NC/5PIN-2.0-D-H-G
CN12
AV_R
GND
AV_L
GND
CVBS
NC/5PIN-2.0-D-H-G
DVD &1
CN10
DVD-CVBS
GND
NC/2PIN-2.0-D-H-G
R198
C254
NC/75ohm-0603- 5%-1/10W
NC/100pF-0603-NPO- 5%-50V
CN17
DVD_R
GND
DVD_L
GND
DVD_IR
NC/5PIN-2.0-D-H-G
DVD_R
R50
DVD_R"
NC/4K7ohm-0603- 5%-1/10W
NC/47Kohm-0603- 5%-1/10W
R186
DVD_L
R51
DVD_L"
NC/4K7ohm-0603- 5%-1/10W
NC/47Kohm-0603- 5%-1/10W
R187
DVD_POWER
CN14
DVD+5V
GND
GND
+12V
C148
NC/6PIN-2.0-D-H-G
NC/0.1uF-0603-Y5V-+80%-20%-50V
+5V
Q28
NC/AO3401
DVD+5V
NC/4K7ohm-0603- 5%-1/10W
NC/10Kohm-0603- 5%-1/10W
NC/100Kohm-0603- 5%-1/10W
NC/0.1uF-0603-X7R- 10%-50V
NC/PMBT3904
NC/0.1uF-0603-Y5V-+80%-20%-50V
R93
C147
R95
C79
I2_SW
R94
Q27
5V_AMP1
R218
R222
DVD_R"
C73
DVD_R'
DVD_L"
C75
DVD_L'
R231
NC/100Kohm-0603- 5%-1/10W
NC/100Kohm-0603- 5%-1/10W
NC/1uF-0603-Y5V-+80%-20%-10V
NC/100Kohm-0603- 5%-1/10W
NC/100Kohm-0603- 5%-1/10W
NC/1uF-0603-Y5V-+80%-20%-10V
R232
12_INPUT
Title
Size
B
Number
Revision
Date:
File:

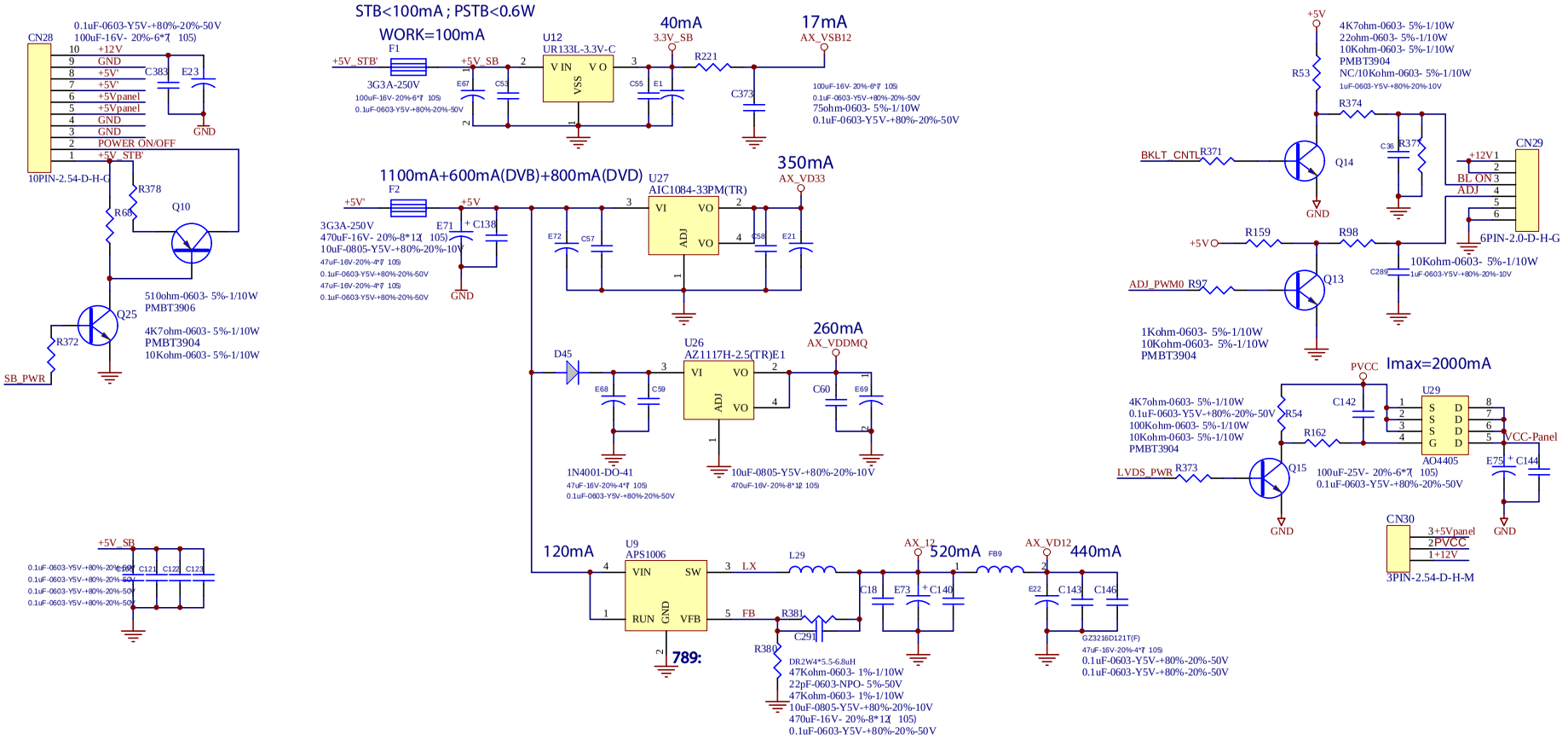

Title		
Size B	Number	Revision
Date: File:		

ITEM	NAME	MATERIAL SPEC	QTY
1	CAPACITANCE	3pF-0603-NPO-±5%-50V	2
2	CAPACITANCE	10pF-0603-NPO-±5%-50V	3
3	CAPACITANCE	18pF-0603-NPO-±5%-50V	2
4	CAPACITANCE	22pF-0603-NPO-±5%-50V	13
5	CAPACITANCE	30pF-0603-NPO-±5%-50V	2
6	CAPACITANCE	39pF-0603-NPO-±5%-50V	6
7	CAPACITANCE	56pF-0603-NPO-±5%-50V	4
8	CAPACITANCE	100pF-0603-NPO-±5%-50V	5
9	CAPACITANCE	150pF-0603-X7R-±10%-50V	8
10	CAPACITANCE	330pF-0603-X7R-±10%-50V	4
11	CAPACITANCE	390pF-0603-X7R-±10%-50V	2
12	CAPACITANCE	1000pF-0603-X7R-±10%-50V	9
13	CAPACITANCE	1500pF-0603-X7R-±10%-50V	3
14	CAPACITANCE	2700pF-0603-X7R-±10%-50V	2
15	CAPACITANCE	0.01uF-0603-X7R-±10%-50V	12
16	CAPACITANCE	0.047uF-0603-X7R-±10%-25V	1
17	CAPACITANCE	0.1uF-0603-Y5V-+80%-20%-50V	177
18	CAPACITANCE	0.22uF-0603-Y5V-+80%-20%-16V	1
19	CAPACITANCE	0.47uF-0603-Y5V-+80%-20%-16V	2
20	CAPACITANCE	1uF-0603-Y5V-+80%-20%-10V	42
21	CAPACITANCE	10uF-0805-Y5V-+80%-20%-10V	7
22	CAPACITANCE	0ohm-1206-±5%-1/4W	1
23	CAPACITANCE	8R2ohm-1206-±5%-1/4W	2
24	CAPACITANCE	0ohm-0603-±5%-1/10W	17
25	CAPACITANCE	10ohm-0603-±5%-1/10W	13
26	CAPACITANCE	22ohm-0603-±5%-1/10W	5

27	CAPACITANCE	33ohm-0603-±5%-1/10W	13
28	CAPACITANCE	56ohm-0603-±5%-1/10W	6
29	CAPACITANCE	75ohm-0603-±5%-1/10W	28
30	CAPACITANCE	100ohm-0603-±5%-1/10W	38
31	CAPACITANCE	220ohm-0603-±5%-1/10W	3
32	CAPACITANCE	330ohm-0603-±1%-1/10W	1
33	CAPACITANCE	390ohm-0603-±5%-1/10W	1
34	CAPACITANCE	499ohm-0603-±1%-1/10W	1
35	CAPACITANCE	510ohm-0603-±5%-1/10W	8
36	CAPACITANCE	1Kohm-0603-±5%-1/10W	20
37	CAPACITANCE	1K2ohm-0603-±5%-1/10W	2
38	CAPACITANCE	1K8ohm-0603-±5%-1/10W	2
39	CAPACITANCE	2K2ohm-0603-±5%-1/10W	11
40	CAPACITANCE	3K6ohm-0603-±5%-1/10W	2
41	CAPACITANCE	4K7ohm-0603-±5%-1/10W	45
42	CAPACITANCE	5K6ohm-0603-±5%-1/10W	3
43	CAPACITANCE	6K8ohm-0603-±5%-1/10W	2
44	CAPACITANCE	10Kohm-0603-±5%-1/10W	32
45	CAPACITANCE	12Kohm-0603-±5%-1/10W	7
46	CAPACITANCE	15Kohm-0603-±1%-1/10W	4
47	CAPACITANCE	22Kohm-0603-±5%-1/10W	2
48	CAPACITANCE	33Kohm-0603-±5%-1/10W	6
49	CAPACITANCE	36Kohm-0603-±5%-1/10W	2
50	CAPACITANCE	39Kohm-0603-±5%-1/10W	2
51	CAPACITANCE	47Kohm-0603-±1%-1/10W	2
52	CAPACITANCE	47Kohm-0603-±5%-1/10W	16
53	CAPACITANCE	68Kohm-0603-±5%-1/10W	1
54	CAPACITANCE	100Kohm-0603-±5%-1/10W	21

55	CAPACITANCE	150Kohm-0603-±5%-1/10W	2
56	CAPACITANCE	270Kohm-0603-±5%-1/10W	8
57	CAPACITANCE	1Mohm-0603-±5%-1/10W	3
58	CAPACITANCE	4*22ohm-0402-±5%-1/16W	4
59	CAPACITANCE	4*100ohm-0402-±5%-1/16W	1
60	BLOCK	4*4K7ohm-0402-±5%-1/16W	2
61	PRESS DIODE	33V-LL-34-1/2W	2
62	DIODE	BA792	1
63	DIODE	LL4148-LL-34	8
64	DYNATRON	PMBT3904	15
65	DYNATRON	PMBT3906	4
66	DYNATRON	AO3407	1
67	DYNATRON	TL432-CSF	1
68	ESD SAFETY DIODE	MLVS0603M07	14
69	ESD SAFETY DIODE	BAV99LT1(A7)-SOT-23	19
70	MAGNETISM	GZ1608D121T(F)	27
71	MAGNETISM	MMZ1608S121A	1
72	MAGNETISM	MMZ1608S800A	1
73	MAGNETISM	GZ3216D121T(F)	4
74	INDUCTANCE	SDFL1608Q1R0KT(F)	4
75	HDMI	HMR41-AK5200 19PIN/0.5	2
76	IC	UR133L-3.3V-C	1
77	IC	STL8110GCH300	1
78	IC	APS1006ET5	1
79	IC	AIC1084-18PM(TR)	1
80	IC	AIC1084-33PM(TR)	1
81	IC	AZ1117H-2.5(TR)E1	1
82	IC	AZ1117H-3.3(TR)E1	1

83	IC	FM24C02	2
84	IC	AT24C64N	1
85	IC	MC4558L	1
86	IC	W25X80VSSIG	1
87	IC	SN74LVC14	1
88	IC	74HC4052D	2
89	IC	SN74CBT3257CD-SO-16	1
90	IC	R2S15102NP	1
91	IC	S29AL016D70TFI02	1
92	IC	TDA9886TS	1
93	IC	UM6K1N	2
94	IC	PS321TQFP80G	1
95	IC	WJCE6353 S L9G5	1
96	IC	EM6A9160TS-4G	1
97	IC	HY57V641620ETP-7	1
98	IC	ZR39160PQCG	1
99	IC	SVP-AX32-LF	1
100	B.TR901E	双面-2*(289.0*113.0)-FR4-1.6	1
1	ELECTROANALYSIS	2.2uF-50V-±20%-4*7－105℃	1
2	ELECTROANALYSIS	10uF-25V-±20%-4*7－105℃	4
3	ELECTROANALYSIS	47uF-16V-±20%-4*7－105℃	15
4	ELECTROANALYSIS	100uF-16V-±20%-6*7－105℃	8
5	ELECTROANALYSIS	100uF-25V-±20%-6*7－105℃	1
6	ELECTROANALYSIS	220uF-16V-±20%-6*7－105℃	1
7	ELECTROANALYSIS	470uF-16V-±20%-8*12－105℃	4
8	ELECTROANALYSIS	470uF-35V-±20%-10*13－105℃	3
9	ELECTROANALYSIS	1000uF-16V-±20%-10*13－105℃	1
10	MINI BOX	334-63V-±5%	4

11	INDUCTANCE	CH8010U-470K-037-G	2
12	INDUCTANCE	DR2W4*5.5-6.8uH	1
13	INDUCTANCE	EC0410-101K-R-L-F	2
14	DIODE	1N4001-DO-41	3
15	DIODE	1N5822	1
16	PIN	2*18PIN-2.0-D-H-M	1
17	SOCKET	4PIN-2.0-D-H-G	2
18	SOCKET	4PIN-2.0-D-H-蓝色-G	1
19	SOCKET	5PIN-2.0-D-H-G	1
20	SOCKET	6PIN-2.0-D-H-G	1
21	SOCKET	3PIN-2.0-D-H-G	1
22	SOCKET	3PIN-2.54-D-H-G	1
23	SOCKET	4PIN-2.54-D-H-G	1
24	SOCKET	4PIN-2.54-D-H-红色-G	1
25	SOCKET	10PIN-2.54-D-H-G	1
26	PIN	4MHz-±30PPM-20PF-HC-49S	1
27	PIN	20.250MHz-±30PPM-20PF-HC-49S	1
28	PIN	20.480MHz-±30PPM-20PF-HC-49S	1
29	PIN	24MHz-±30PPM-20PF-HC-49S	1
30	FILTER	VF389A1D-VEDIO	1
31	FILTER	AF389A2D-AUDIO	1
32	FUSE	3G3A-250V	2
33	DB15 JACK	D351-015F-001-SHORT-G	1
34	S-VIDEO	DSW-3.5-401	1
35	SCART	RC-2101(CS-104)-BEND	2
36	8 DIGITAL AV JACK	AV8-8.4-13D(UP BLUE GREEN RED WHITE, BOTTOM RED YELLOW RED WHITLE	1
37	TUNER	DTT-8A1C/T1146	1
38	SILICAL GEL	0.1g	1

39	DISPERSING HEAT	28*28*11	1
40	SCREEN	70.5*51.5*18.5	1
41	PIN	3PIN-2.54-D-H-M	1
42	CAP	2PIN-2.54(BLACK)	1

HOW TO ENTER FACTORY MODE and adjust the LVDS Mapping

1. Press SOUND key and set sound mode at CINIMA mode；

2. Press TIMER key and set sleep time at 120；

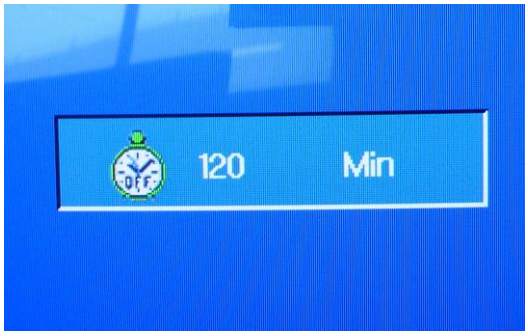

3. Press green color key not power off function key you'll see that the screen displays the factory mode information as the following picture.

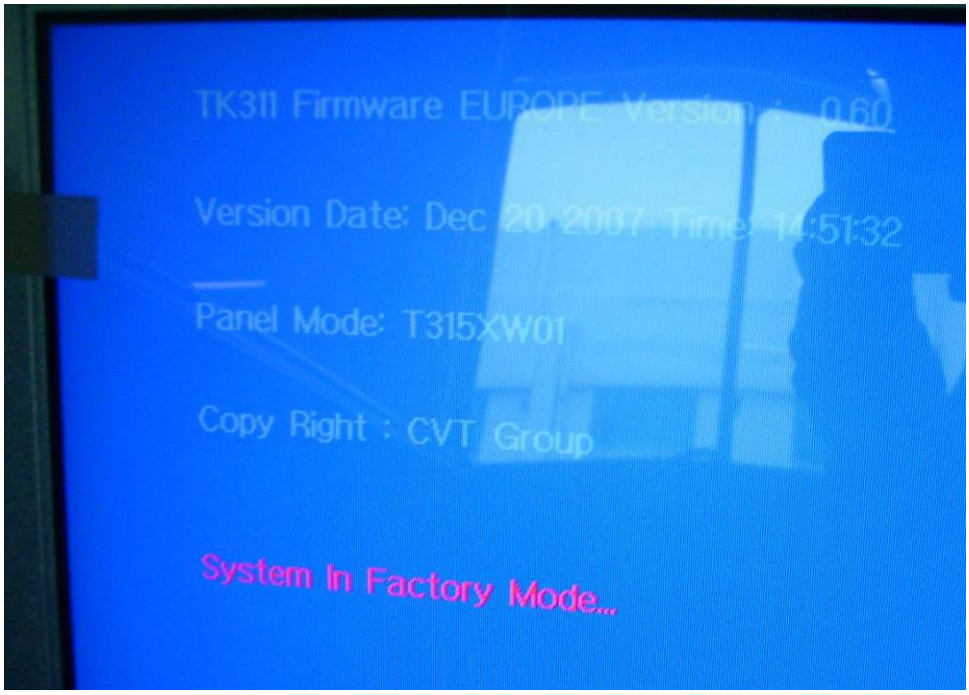

4. Press number key 1， the screen displays as follow：

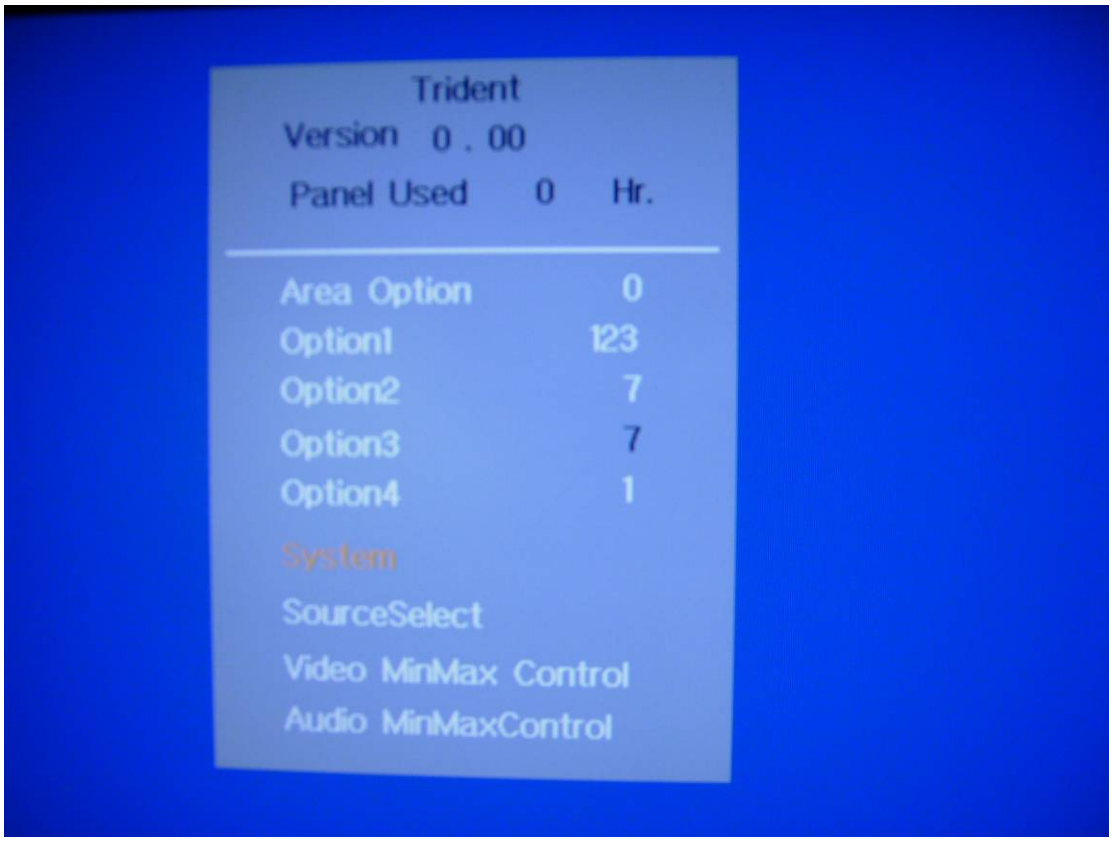

5. press number key 2 to adjust white balance.
6. press number key 3 to exit.